TECHNICAL SPECIFICATION SHEET

PRODUCT NAME Giselle X Slatwall Dynamic Arm

PRODUCT CODE GLA/013

PRODUCT DATA

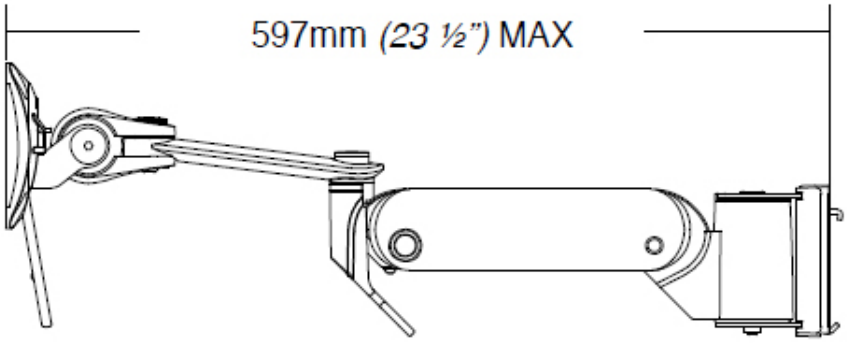

KEY FEATURES

- Easy to install - the arm comes pre-assembled
- Mounts to walls, slatwalls and toolbars
- Fits with all CBS posts to give a wide range of height / aesthetic / cost options
- Over 90 degree vertical tilt to avoid glare
- Over 180 degree horizontal movement
- Portrait landscape screen mounting

Product classification	Monitor Arms
Max load	7Kg (15.7lb)
Min load	4.5Kg (10lb)
Horizontal Range	597mm
Vertical Range	240mm
Build level	C
Box contents	Arm and plastic PQR, Allen key
Recycled Content	71%
Total Product Recyclable	100%

colebrook bosson saunders

TECHNICAL SPECIFICATION SHEET

PRODUCT NAME Giselle X Slatwall Dynamic Arm

PRODUCT CODE GLA/013

PRODUCT DATA

LOGISTICAL

Box dims (HxWxD)	570 **x** 150 **x** 80 **mm**
Carton quantity	6
Weight inner	2.3 **kg**
Master dims (HxWxD)	660 **x** 400 **x** 265 **mm**
Master weight	14.5 **kg**
Country of origin	China
Country of configuration	UK

COLOUR	PRODUCT CODE	EAN
Silver	GLA/013/S	5060096229759
Black	GLA/013/B	5060096229742
White	N/A	N/A
Custom colour	Subject to MOQ	

GUARANTEE

Guarantee term	Unlimited Lifetime
Notes	Excludes gas strut - warranty 5 years & quick release - warranty 2 years

COMPLIANCE & SAFETY CERTIFICATION

Whilst no mandatory standards apply to the monitor arm product sector, all Colebrook Bosson Saunders monitor arms have been designed with appropriate articulation features, dimensional range and adjustability to conform to the requirements of BS EN ISO 9241:5 1999 Ergonomic requirements for office work with visual display terminals (VDTs).

Conformance certification

- BS EN ISO 9241:5 1999 Ergonomic Requirements for office work with visual display terminals (VDTs). FIRA certificate of conformance
- FIRA load testing and lifetime fatigue test - PP050. Passed as suitable for 'severe use'
- CE Mark Certified

Test authority	FIRA
Safety certification	CE
CE EN Refs	EN1001 / EN1002 / EN1004

colebrook bosson saunders

TECHNICAL SPECIFICATION SHEET

PRODUCT NAME Giselle X Slatwall Dynamic Arm

PRODUCT CODE GLA/013

PRODUCT DATA

INTERNAL TEST MEASURES

Test parameter Motion Joint Full Cycle Under 8.5kg Load Without Failure

Test value 25000

Test parameter 2 Full Flexure of Middle Joint under Load without Failure

Test value 25000

Test parameter 3 Rotation of Arm on Post through 180° Under Load without Failure

Test value 25000

ENVIRONMENTAL

Environmental Values are based on GLA/011

Material - Type	Material type weight	% PIR of total weight	% PCR of total weight	% of total product recyclable
Plastic	88 g.	0%	0%	6%
Copper	3 g.	0%	0%	0%
Die Cast Aluminium	1064 g.	36%	32%	71%
Steel	340 g.	1%	2%	23%
-				
-				
Total	**1495 g.**	**37%**	**34%**	**100%**

CLEANING STORAGE & MAINTENANCE

Routine servicing Periodic inspection

Service components Available to order

Cleaning & Maintenance Damp cloth, no abbrasives, no solvents to be used on the cosmetic surfaces

Handling & Storage Do not drop or expose to moisture

Colebrook Bosson Saunders (Products) Ltd accept no liability for the accuracy of the information contained herein and retain the right to modify the specifications or data contained herein without prior notification

Sheet last modified: **28/06/2013**

colebrook bosson saunders